REVISIONS						
ZONE	LTR.	DESCRIPTION	ECN NO.	DATE	BY	APPR'D
	A	RELEASED FOR PRODUCTION	DR00990	4/2/03	DPZ	DLT
1A 3B,3A	B	B1 TU124 WAS FM0000347 B2 REW'D DIM'S & ADDED NOTES	72363	01FEB10	SLK	CFH

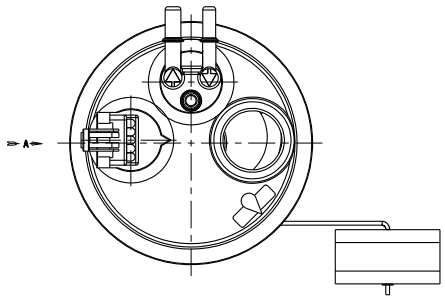

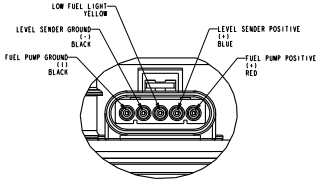

VIEW A
F-CONN
PIN OUT
SCALE 2:1

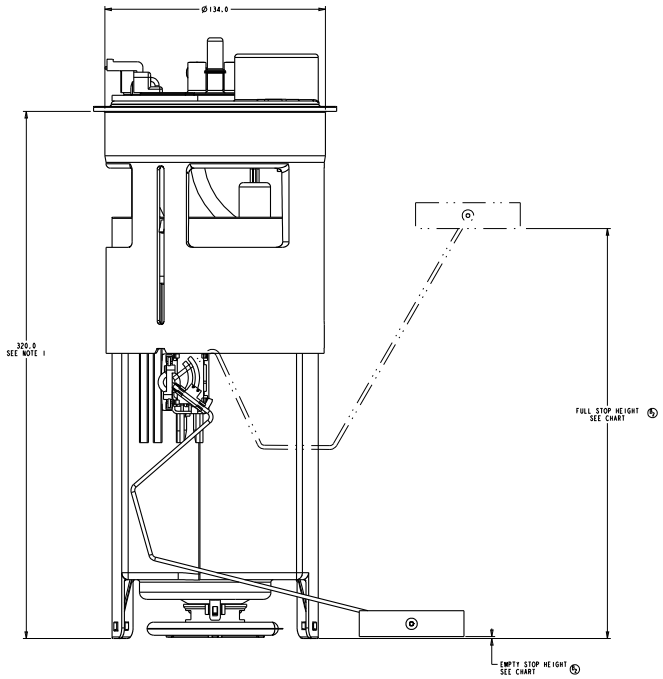

POINT	FLOAT HEIGHT	RESISTANCE (OHMS)
FULL STOP	249.2	5±3
EMPTY STOP	0.0	102±3

NOTES:

1. FUEL MODULE IS SHOWN IN INSTALLED POSITION. TRAVEL FROM THIS POSITION IS ±25mm.
2. THIS UNIT REPLACES CHRYSLER OEM P/N 52017634.

THIS DRAWING AND SPECIFICATION, OR INFORMATION CONTAINED HEREIN, IS THE PROPERTY OF TI AUTOMOTIVE, AND SHALL NOT BE REPRODUCED OR COPIED OR USED IN WHOLE OR IN PART AS THE BASIS FOR MANUFACTURE OR SALE OF ITEMS WITHOUT WRITTEN PERMISSION. THIS DRAWING AND SPECIFICATION, OR INFORMATION CONTAINED HEREIN, SHALL BE RETURNED TO TI AUTOMOTIVE UPON WRITTEN REQUEST.

◆ DENOTES ASSEMBLY/TEST/PROCESS
◆ DENOTES SAFETY CHARACTERISTIC
◊ DENOTES SIGNIFICANT CHARACTERISTIC

INTERNAL USE ONLY
DISTRIBUTION CODE
AF

REF: FM0000347

DO NOT SCALE PRINT

DIMENSIONS AND TOLERANCES PER INSTITUTE OF ENGINEERING

PROJECTION

PRO-E

E
SIZE

TOLERANCE UNLESS OTHERWISE SPECIFIED:
.X ±0.25
.XX ±0.13
.XXX ±0.10
ANGLES ±1°
FRACTIONS ±1/16

MATERIAL

FINISH

TI Automotive
AFTERMARKET DIVISION
600 COLUMBIA STREET
CARO, MICHIGAN 48723

SCALE: 1:1 DATE: 4/2/03
DRN BY: D.P.ZBORAY
CHK'D BY: RHM
APPR'D BY: DLT

TITLE
FUEL DELIVERY MODULE

DRAWING NO. TU124
REV. B